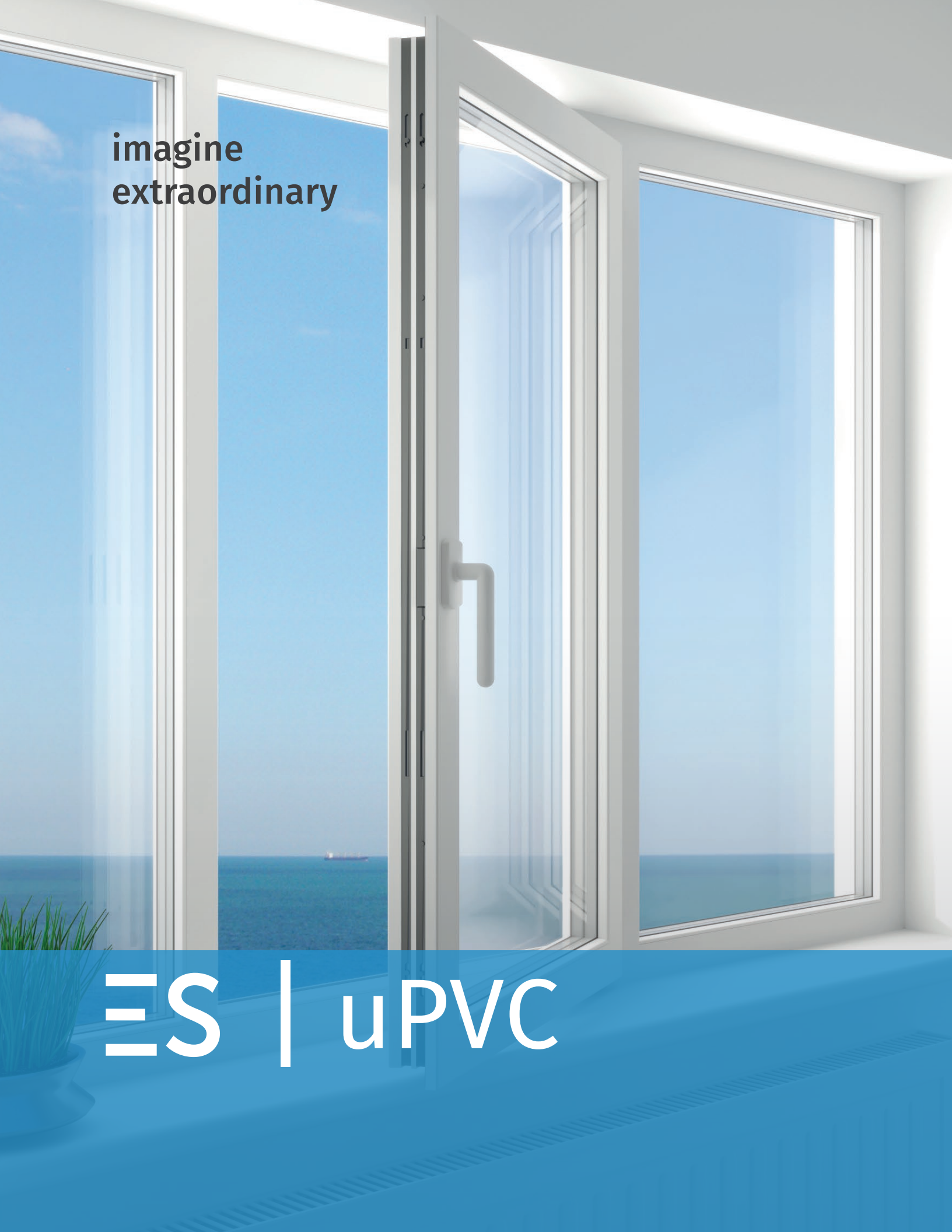

imagine
extraordinary

ES | uPVC

uPVC

Our new uPVC line is designed to enhance the aesthetic appeal, energy efficiency, sound insulation and security of your spaces. Discover the perfect combination of style and functionality with our state-of-the-art products.

Features:

- Energy Efficiency
- Low Maintenance
- Durability and Longevity
- Sound Insulation
- Extended Warranty

Windows

ES-V100 Single-Hung Window

ES-V150 Fixed Window

ES-V200 Horizontal Roller Window

ES-V500 Casement Window

ES-V550 Awning Window

ES

ES-V100

Single-Hung Window

Features

- Glass options:
  7/16” laminated glass
  1” insulating glass
  1” insulating laminated glass
- FBC Test: FL 42159
- Screen options available
- Mullion options available
- Aluminum reinforced
- Standard colors available
- Muntin:

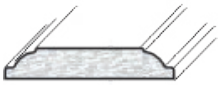

0.875" WIDE x 0.125" TALL

System Description	
Minimum panel size	18 1/8” W x 25” H
Maximum panel size	53” W x 76” H
Frame depth	3.824”
Sightline	2.219” flush frame
	2.719” flange frame

Water infiltration	Air infiltration	Design load
10.50 PSF.	1.57 PSF.	+60/-60 PSF.

ES-V100

Single-Hung Window

Configurations ES-V100

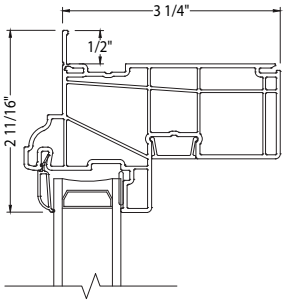

Flange Frame

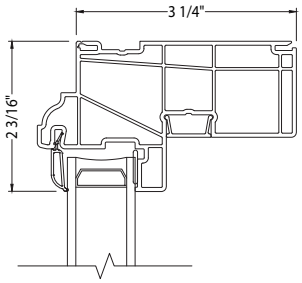

Flush Frame

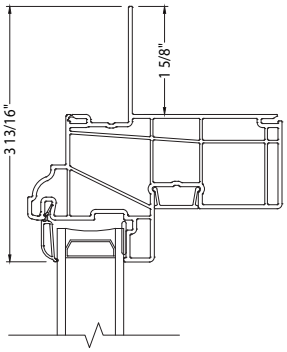

Fin Frame

Details ES-V100

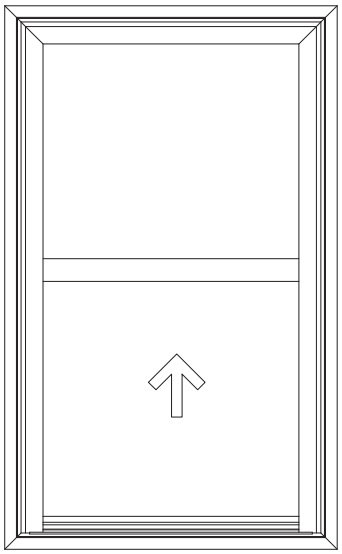

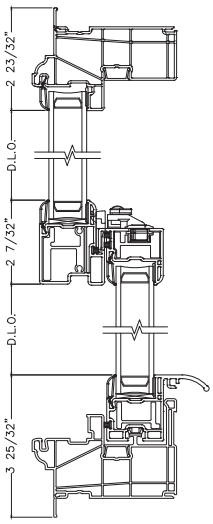

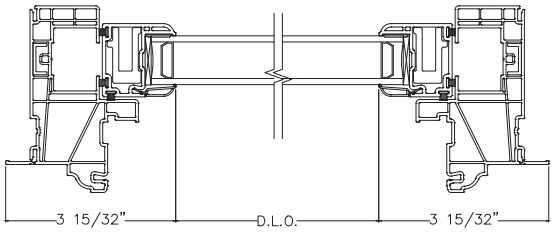

ES-V150

Fixed Window

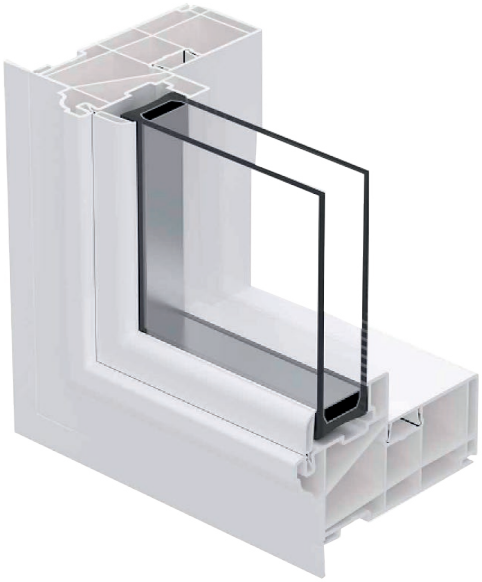

Features

- Glass options:
  7/16” laminated glass
  1” insulating glass
  1” insulating laminated glass
- FBC Test: FL 42155
- Mullion options available
- Aluminum reinforced
- Standard colors available
- Muntin:

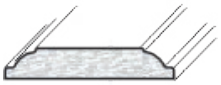

0.875" WIDE x 0.125" TALL

System Description	
Minimum panel size	18 1/8” W x 25” H
Maximum panel size	59” W x 47” H
	35” W x 77” H
Frame depth	3.824”
Sightline	2.219” flush frame
	2.719” flange frame

Water infiltration	Air infiltration	Design load
12 PSF.	1.57 PSF.	+80/-80 PSF.

ES-V150

Fixed Window

Configurations ES-V150

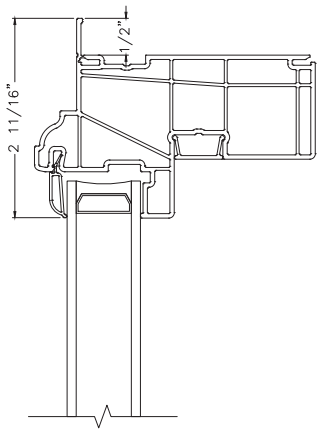

Flange Frame

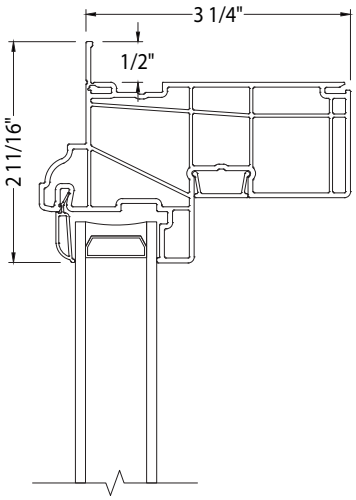

Flush Frame

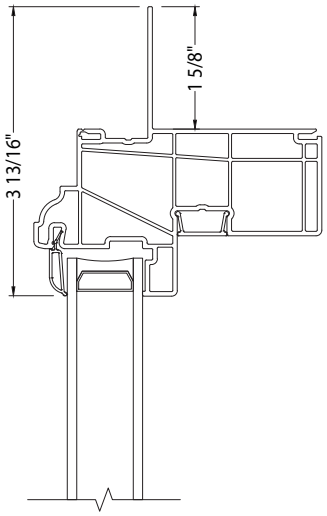

Fin Frame

Details ES-V150

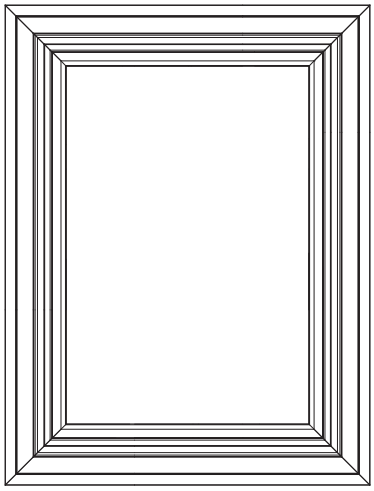

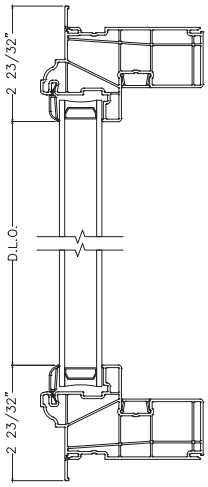

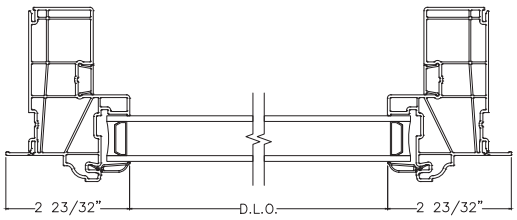

ES-V200

Horizontal Roller Window

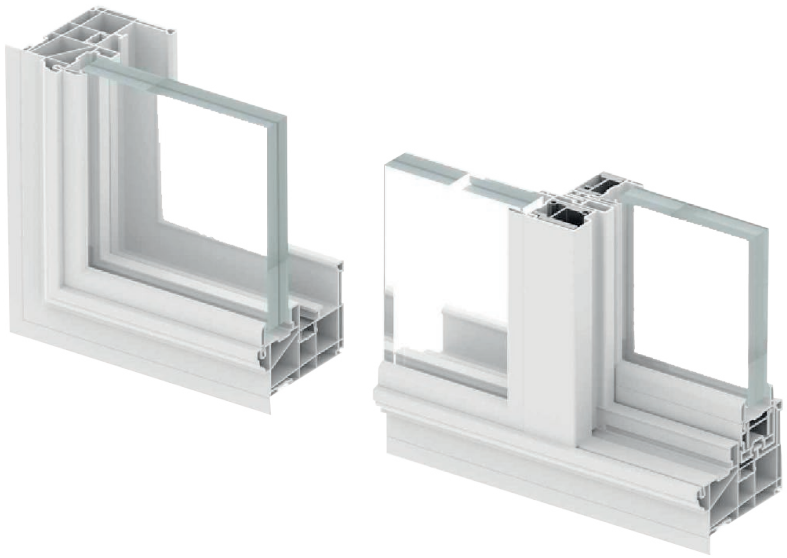

Features

- Glass options:
  7/16” laminated glass
  1” insulating glass
  1” insulating laminated glass
- FBC Test: FL 42158
- Screen options available
- Mullion options available
- Aluminum reinforced
- Standard colors available
- Muntin:

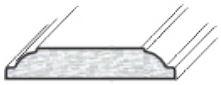

0.875" WIDE x 0.125" TALL

System Description	
Configuration	OX, XO
Minimum panel size	25 1/2” W x 25” H
Maximum panel size	73” W x 59” H
Frame depth	3 13/16”
Sightline	2 7/32”

Water infiltration	Air infiltration	Design load
7.52 PSF.	1.6 PSF.	+60/-60 PSF.

ES-V200

Horizontal Roller Window

Configurations ES-V200

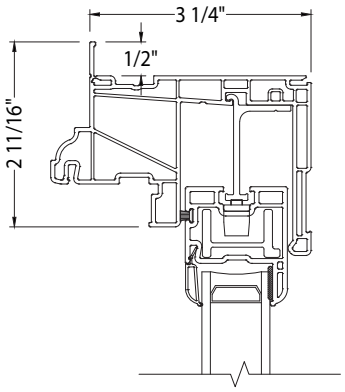

Flange Frame

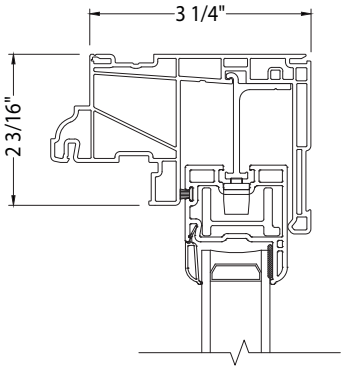

Flush Frame

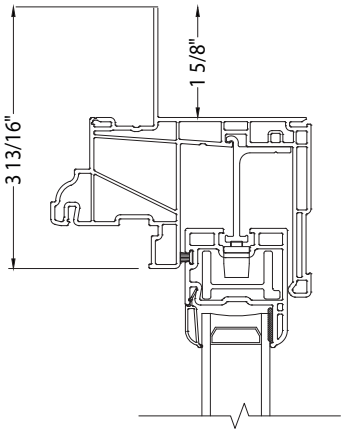

Fin Frame

Details ES-V200

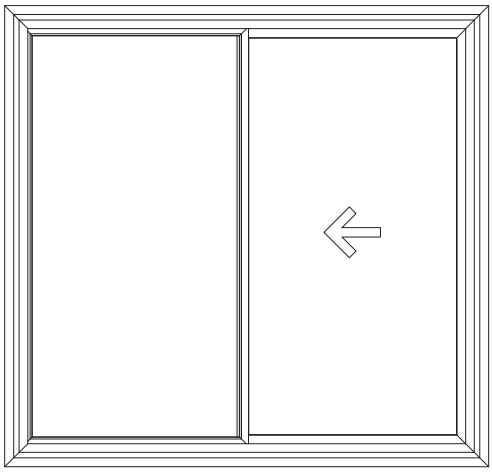

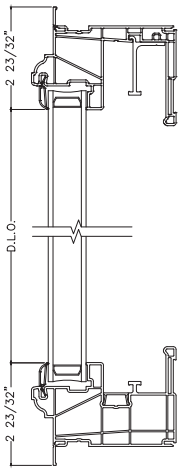

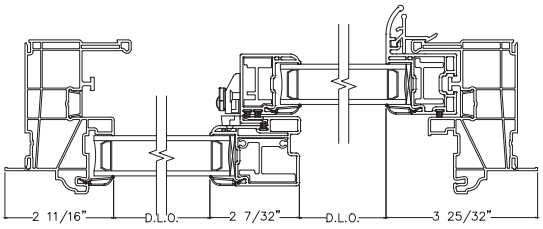

ES-V500

Casement Window

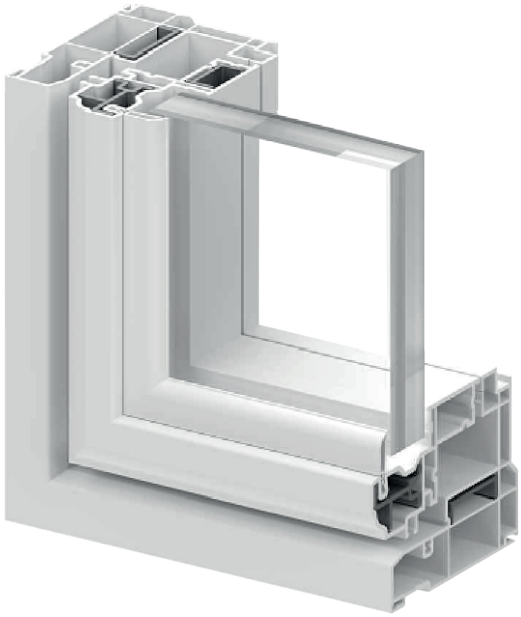

Features

- Glass options:
  7/16” laminated glass
  1” insulating glass
  1” insulating laminated glass
- FBC Test: FL 42156
- Screen options available
- Mullion options available
- Aluminum reinforced
- Standard colors available
- Muntin:

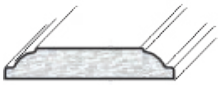

0.875" WIDE x 0.125" TALL

System Description	
Minimum panel size	18 1/8” W x 25” H
Maximum panel size	29” W x 83” H
	41” W x 62” H
Frame depth	3 1/4”
Sightline	2 3/4” flush frame
	3 1/4” flange frame

Water infiltration	Air infiltration	Design load
10.50 PSF.	1.57 PSF.	+60/-60 PSF.

ES-V500

Casement Window

Configurations ES-V500

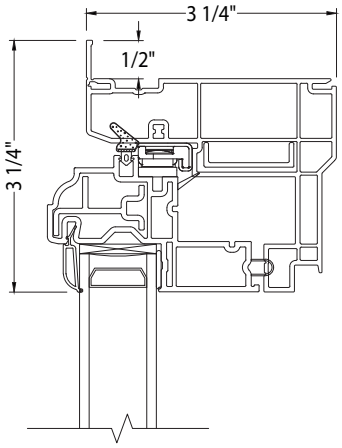

Flange Frame

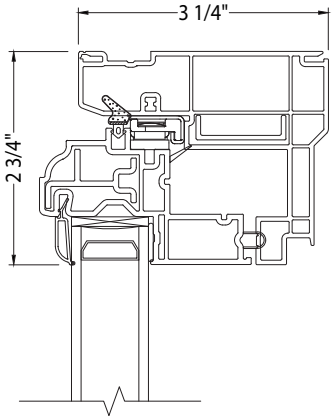

Flush Frame

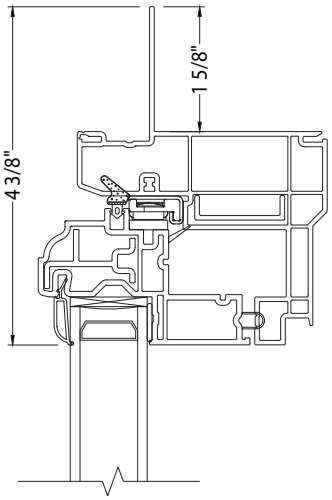

Fin Frame

Details ES-V500

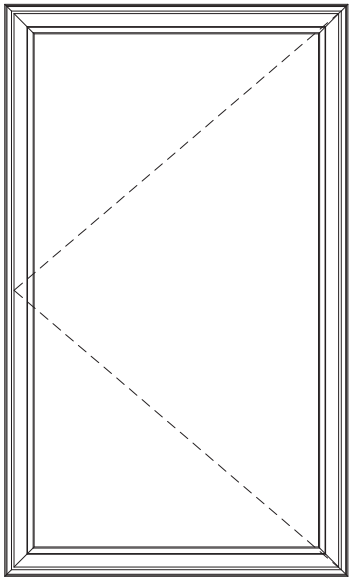

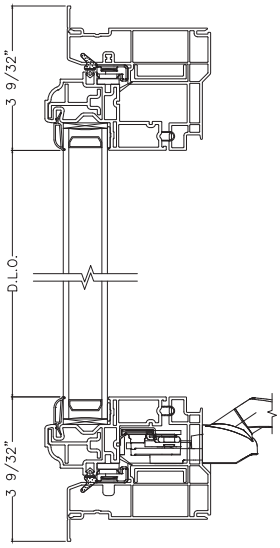

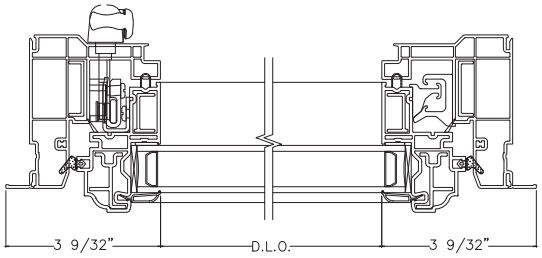

ES-V550

Awning Window

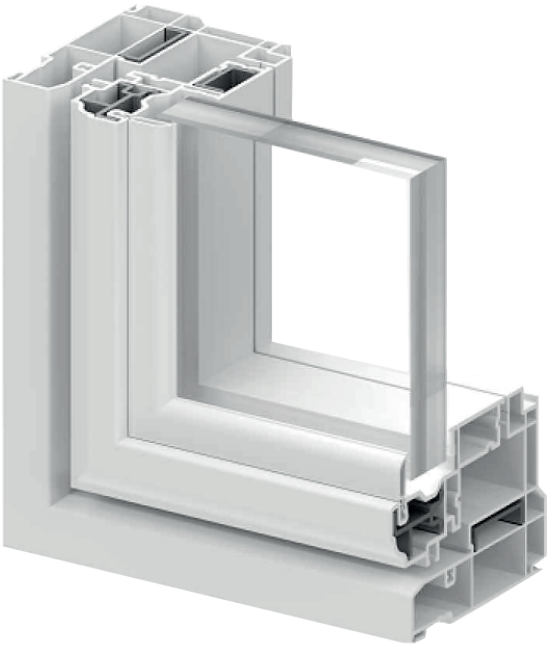

Features

- Glass options:
  7/16” laminated glass
  1” insulating glass
  1” insulating laminated glass
- FBC Test: FL 42157
- Screen options available
- Mullion options available
- Aluminum reinforced
- Standard colors available
- Muntin:

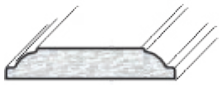

0.875" WIDE x 0.125" TALL

System Description	
Minimum panel size	17” W x 17” H
Maximum panel size	52 1/8” W x 38” H
Frame depth	3 1/4”
Sightline	2 3/4” flush frame
	3 1/4” flange frame

Water infiltration	Air infiltration	Design load
9.0 PSF.	1.57 PSF.	+60/-60 PSF.

ES-V550

Awning Window

Configurations ES-V550

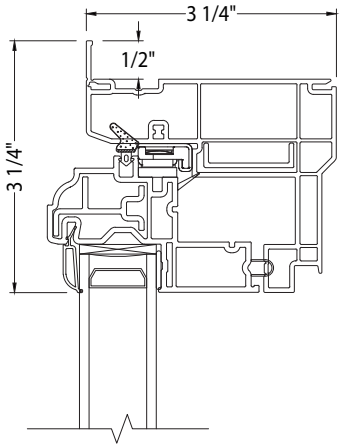

Flange Frame

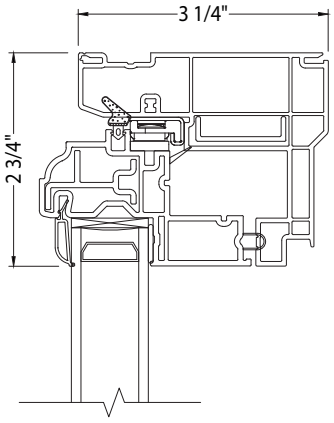

Flush Frame

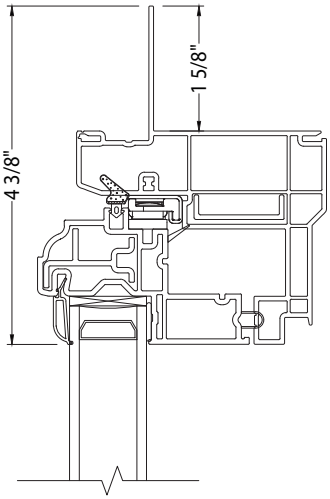

Fin Frame

Details ES-V550

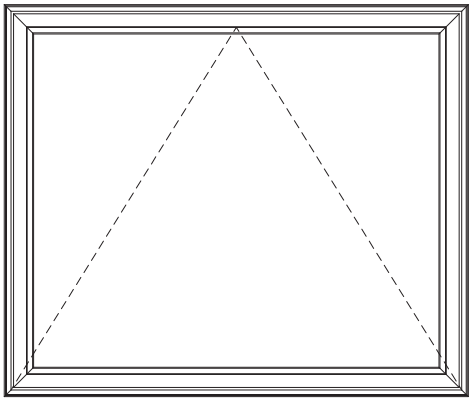

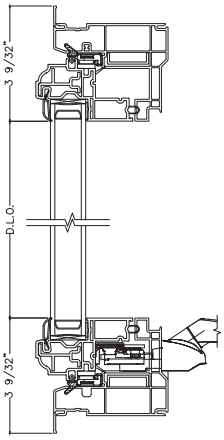

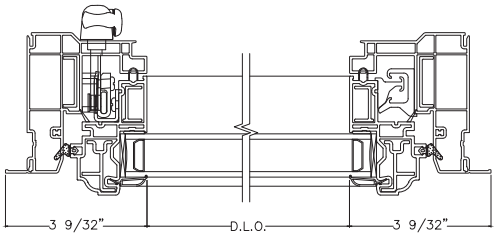

Accesories

Hardware Options

Crack Handle - Arm Operator
(V500/550)

Sash Lock
(V100/200)

Aluminum Mullion

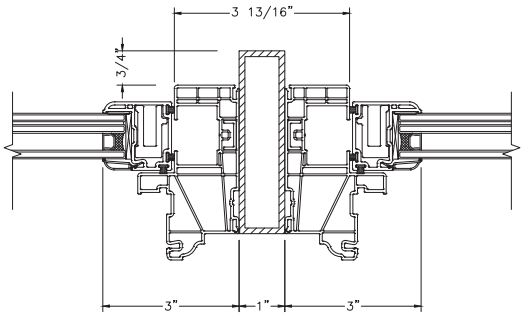

Service

Our engineers and designers provide customers with ongoing assistance and technical support to ensure the best solution for every project.

We offer professional guidance to help customers pinpoint and balance their priorities. With this expert assistance, customers can plan and complete projects to achieve maximum benefits.

Colors & Finishes

Standard color

White

Custom Colors & Laminate Foils (Coming soon)

Anthracite Grey 7016 Smooth 2

Black Smooth 2

Ceylon C-34 N Smooth

Flemish Gold C-33 N Smooth

Golden Oak

Trompet C-32 N Smooth

Hardware Colors

Bronze

Black

White

Engineering and Design

We offer the right solution for the most complex projects, and respond efficiently to the demands of architects. We can deliver reliable, efficient and affordable products, due to a combination of advanced software technology and a leading team of expert engineers and designers, who specialize in windows, doors, glass and aluminum systems.

The UPVC line provide customers the perfect combination of reliability, design and performance across a wide range of product types. It also provides the perfect performance solution, without sacrificing aesthetics.

Designed for Life

The information contained herein is exclusive property of ES, who reserves the right to modify it, including but not limited to the designs and its specifications, without notice. 2023 ES. All rights reserved.
V - November 2023